By JH Industries, Inc.

Edge of Dock

Copperloy offers both Mechanical and Hydraulic Edge of Dock Levelers available in 66, 72, 78, and 84 inch width's in either 20,000 or 30,000 pound capacities, engineered to greatly enhance workplace productivity and efficiency when loading and unloading.

Features and Specs:

General Standards: Meets or exceeds MH-30.1 performance requirements.
High Strength Steel Tread Plate: 3/8 or 1/2 inch thick high strength steel with 50,000 PSI minimum tensile strength provides superior strength for long-lasting results.
Product Durability: Designed and engineered using a three dimensional engineering software package, tested for maximum durability.
Safety: All models are equipped with a safety maintenance strut to secure the unit while performing routine maintenance.

Ideal for retrofit: Easily mounts to the face of almost any dock. Transition plates and approach ramps are also available.
Service Range: Capable of servicing trucks 5 inches above and 5 inches below the dock.
Low maintenance: Maintenance is reduced to simple lubrication of hinges which come equipped with grease fittings.
Quick, easy lifting and positioning: Our exclusive lift mechanism and spring assembly sets the board in place with one-quarter the effort needed to operate a conventional edge of dock. Push button operation on hydraulic models.

Simply pull back the handle and the lip will mechanically lift over the dock height. Then, a slight forward push of the handle will position the lip onto the truck floor.

Project Information

Job Name _____

Address_____

_____

General Contractor_____

Model _____ Quantity _____

Certified For Construction

By_____

Company _____

Address _____

_____

Date ____ /____ /____

Models

Standard Lip (12.5 inch projection)

Check	Model #	Capacity	Deck Width	Total Width
☐	SEL2066CG	20,000 lb	66"	95.5"
☐	SEL2072CG	20,000 lb	72"	101.5"
☐	SEL3066CG	30,000 lb	66"	95.5"
☐	SEL3072CG	30,000 lb	72"	101.5"
☐	SEL3078CG	30,000 lb	78"	107.5"
☐	SEL3084CG	30,000 lb	84"	113.5"
Refrigerated Lip (14 inch projection)				
☐	SEL2066CRG	20,000 lb	66"	95.5"
☐	SEL2072CRG	20,000 lb	72"	101.5"
☐	SEL3066CRG	30,000 lb	66"	95.5"
☐	SEL3072CRG	30,000 lb	72"	101.5"
☐	SEL3078CRG	30,000 lb	78"	107.5"
☐	SEL3084CRG	30,000 lb	84"	113.5"

Additional Options

- ☐ Reduced lip bend _____
- ☐ Extended lip for refrigerated trailers
- ☐ Post Office Model with 2" cart guard
- ☐ Steel bumper guards: Quantity ____
- ☐ Tapered Lip (on each side)
- ☐ Recessed pit model
- ☐ In-Board handle
- ☐ Hydraulic Model No. _____
- ☐ 10" bumpers (standard)
- ☐ 12" bumpers optional
- ☐ Wheel chocks: Quantity _____
- ☐ Other color option _____

JH Industries, Inc. 1981 E. Aurora Rd. Twinsburg, OH 44087
Phone: (330) 963-4105/(800) 321-4968 Fax: (330) 963-4111
Email: Sales@copperloy.com www.copperloy.com

A (EOD WIDTH)	B (O.A. WIDTH)
66”	95”
72”	101”
78”	107”
84”	113”

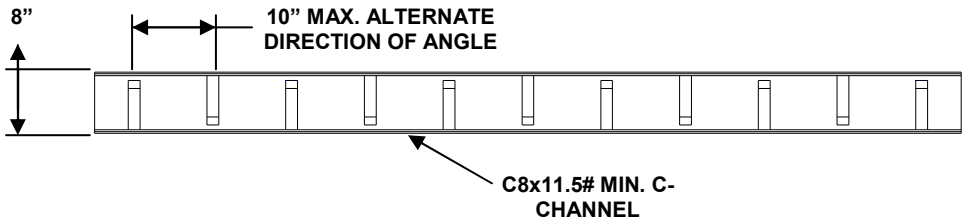

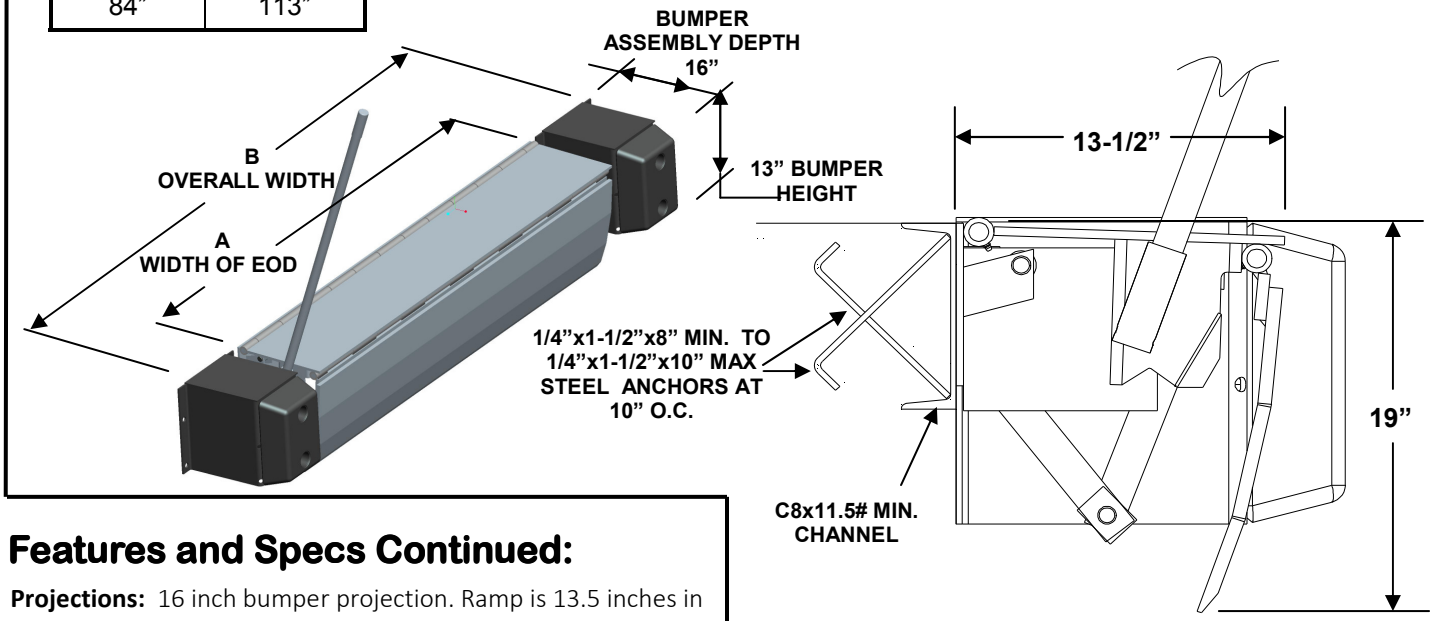

Features and Specs Continued:

Projections: 16 inch bumper projection. Ramp is 13.5 inches in stored position. Lip extends 12.5 inches beyond bumper.
Bumpers: Each edge of dock is shipped with two 4” x 13” x 10” bumpers consisting of molded reinforced rubber mounted to steel box frame. Optional 4” x 12” x 13” bumper assembly also available.
Lift Assist: Dual extension springs.
Finish: Unit is completely cleaned, deburred, and painted gray.
Beveled Lip Edge: 11 degree bevel provides smooth transition to trailers.
Handle: Heavy duty steel handle included with rubber safety grip.
Hinges: Comes equipped with grease fittings and are pre-lubricated upon arrival.
Installation: Unit ships completely assembled ready for installation. Unit to be securely welded to a minimum of an 8 inch channel, embedded in concrete. Anchor hook security recommended.
Warranty: Warranty against defects in materials and workmanship for one year.

Installation Information
Unit should be continuously welded to the dock edge channel. Channel should be imbedded in concrete and secured by anchoring hooks made of bent flat straps, maximum 10” center to center.

Optional Hydraulic Edge of Dock

General Details: Enhance productivity, efficiency and overall capabilities, all while reducing stress and injuries for employees. Standard EOD’s can be easily converted with the purchase of a hydraulic power unit.
Capacities: 20,000 or 30,000 pounds.
Widths: 66, 72, 78, or 84 inches.
Options: Consult factory for more information.
Power: 115/230 VAC Single Phase power. Three-phase model also available.

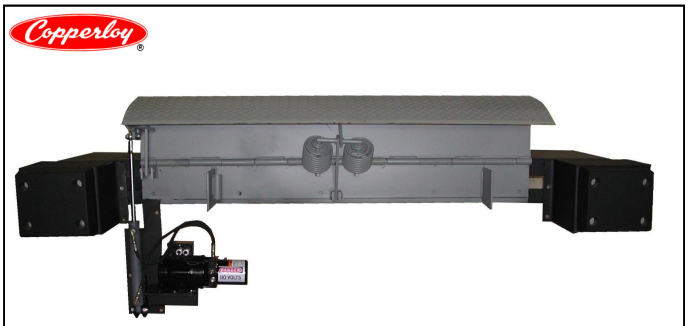

Optional Hydraulic Model

JH Industries, Inc. 1981 E. Aurora Rd. Twinsburg, OH 44087
Phone: (330) 963-4105/(800) 321-4968 Fax: (330) 963-4111
Email: Sales@copperloy.com www.copperloy.com